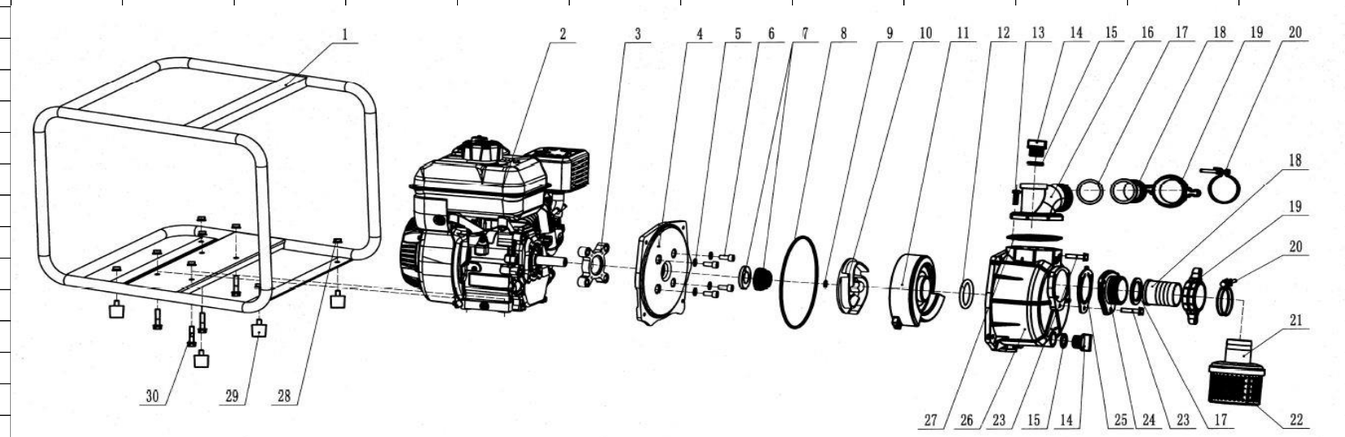PRONTO	PART NUMBER	USE	DESCRIPTION	804450											
804623	BIA-WP20ABS-1		FRAME												
	BIA-WP20ABS-2		ENGINE												
804641	BIA-WP20ABS-3		CONNECTOR												
804643	BIA-WP20ABS-4		PUMP BODY												
804644	BIA-WP20ABS-5		WASHER												
804645	BIA-WP20ABS-6		SOCKET SCREW												
804800	BIA-WP20ABS-7		MECHANICAL SEAL												
804646	BIA-WP20ABS-8		O RING 192X4												
804647	BIA-WP20ABS-9		WASHER												
804624	BIA-WP20ABS-10		IMPELLER												
804625	BIA-WP20ABS-11		DIFFUSER												
804626	BIA-WP20ABS-12		SEAL RING												
804627	BIA-WP20ABS-13		HEX BOLT M8X25												
804628	BIA-WP20ABS-14		PLUG												
804629	BIA-WP20ABS-15		O RING 25X4.2												
804630	BIA-WP20ABS-16		OUTLET												
804631	BIA-WP20ABS-17		GASKET												
804632	BIA-WP20ABS-18		PIPE												
804633	BIA-WP20ABS-19		SPANNER												
804634	BIA-WP20ABS-20		CLAMP												
804635	BIA-WP20ABS-21		STRAINER												
804636	BIA-WP20ABS-22		STRAINER FITTING												
804588	BIA-WP20ABS-23	USE BIA-WP10-30	HEX BOLT M8X20												
804637	BIA-WP20ABS-24		INLET												
804638	BIA-WP20ABS-25		NON RETURN VALVE												
804639	BIA-WP20ABS-26		PUMP BODY												
804640	BIA-WP20ABS-27		OUTLET SEAL												
804601	BIA-WP20ABS-28	USE BIA-WP15A-1	HEX NUT M8												
804594	BIA-WP20ABS-29	USE BIA-WP10-36	RUBBER FEET												
804642	BIA-WP20ABS-30		HEX BOLT M8X35